CORRUGATED STEEL DECKING

For: Carpet Rack, Fabric or Any Rolled Goods Storage

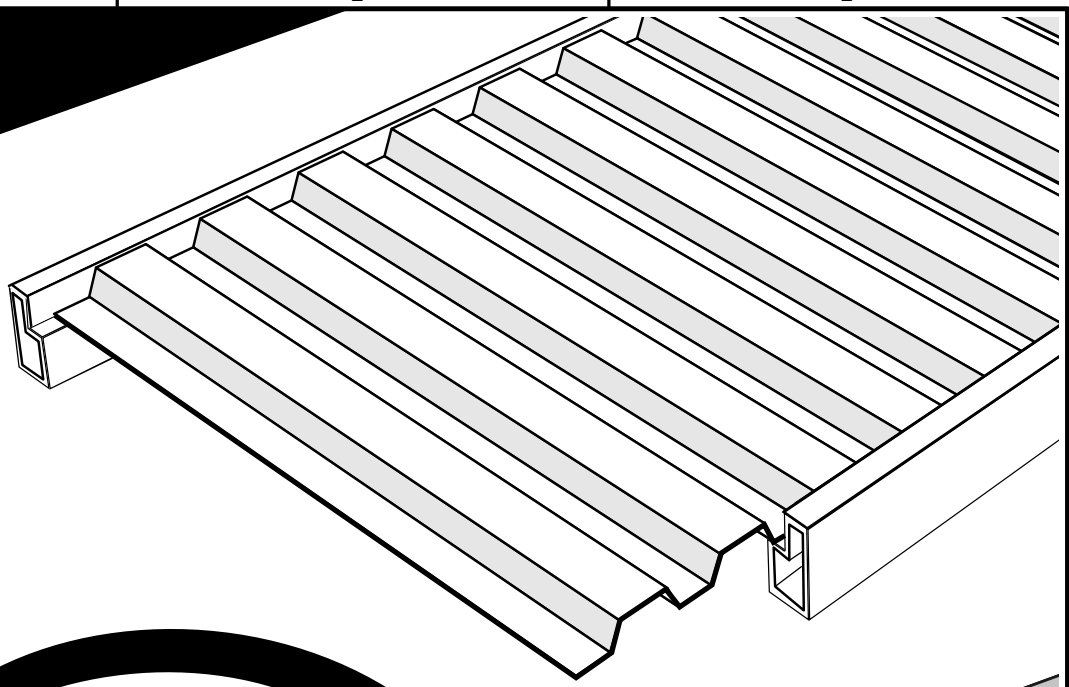

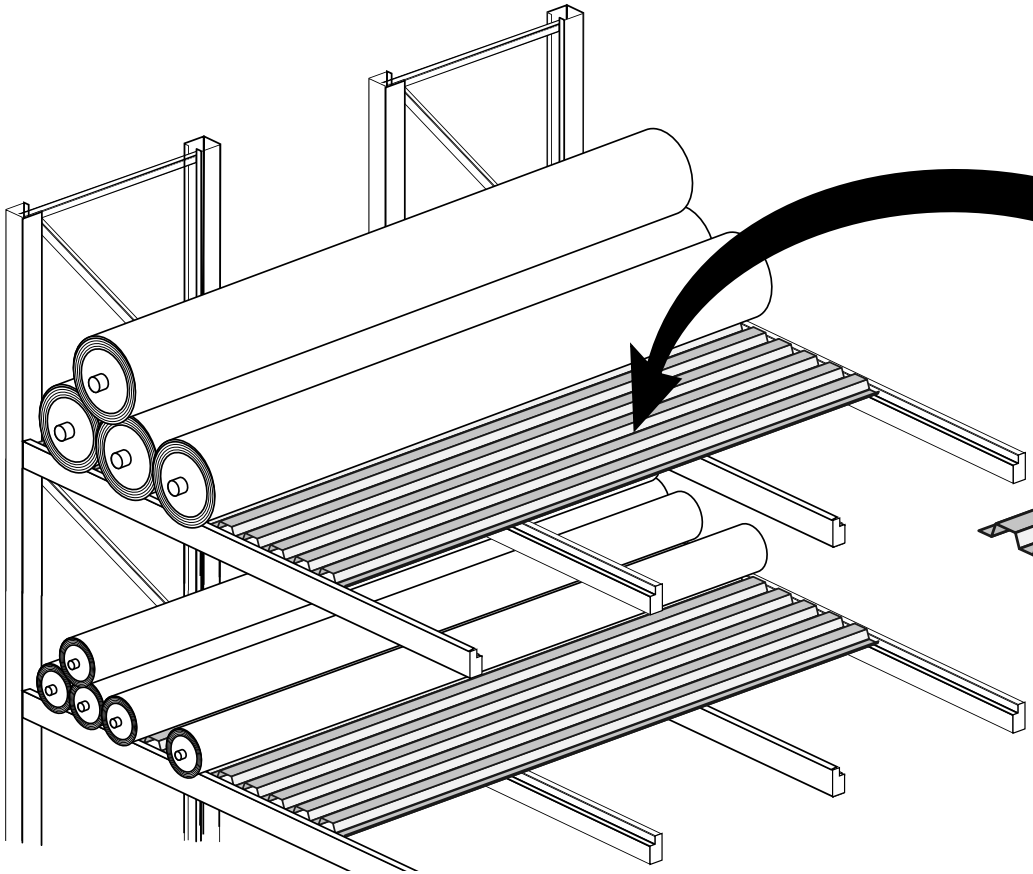

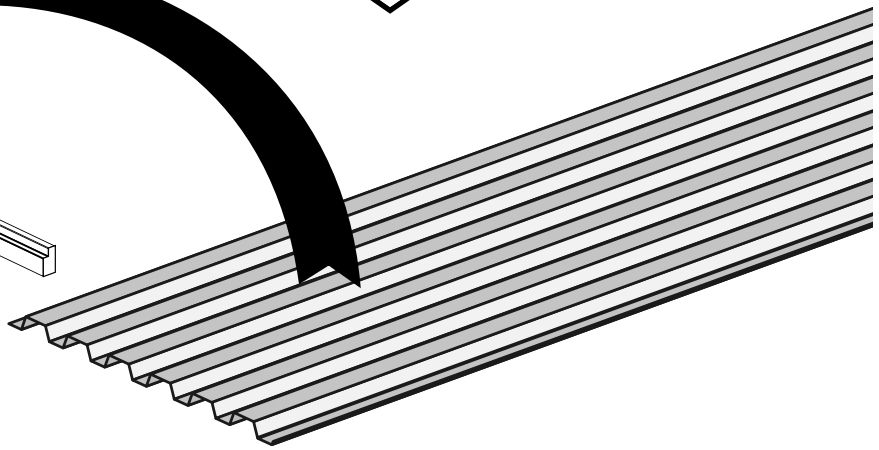

Rack Deck by DACS — Williamsburg, VA

Distributed By:

DATE	LET	FREQ	REVISIONS	BY	CK	APPD	DATE	LET	FREQ	REVISIONS	BY	CK	APPD

RD-LIT-031B

Copyright ©